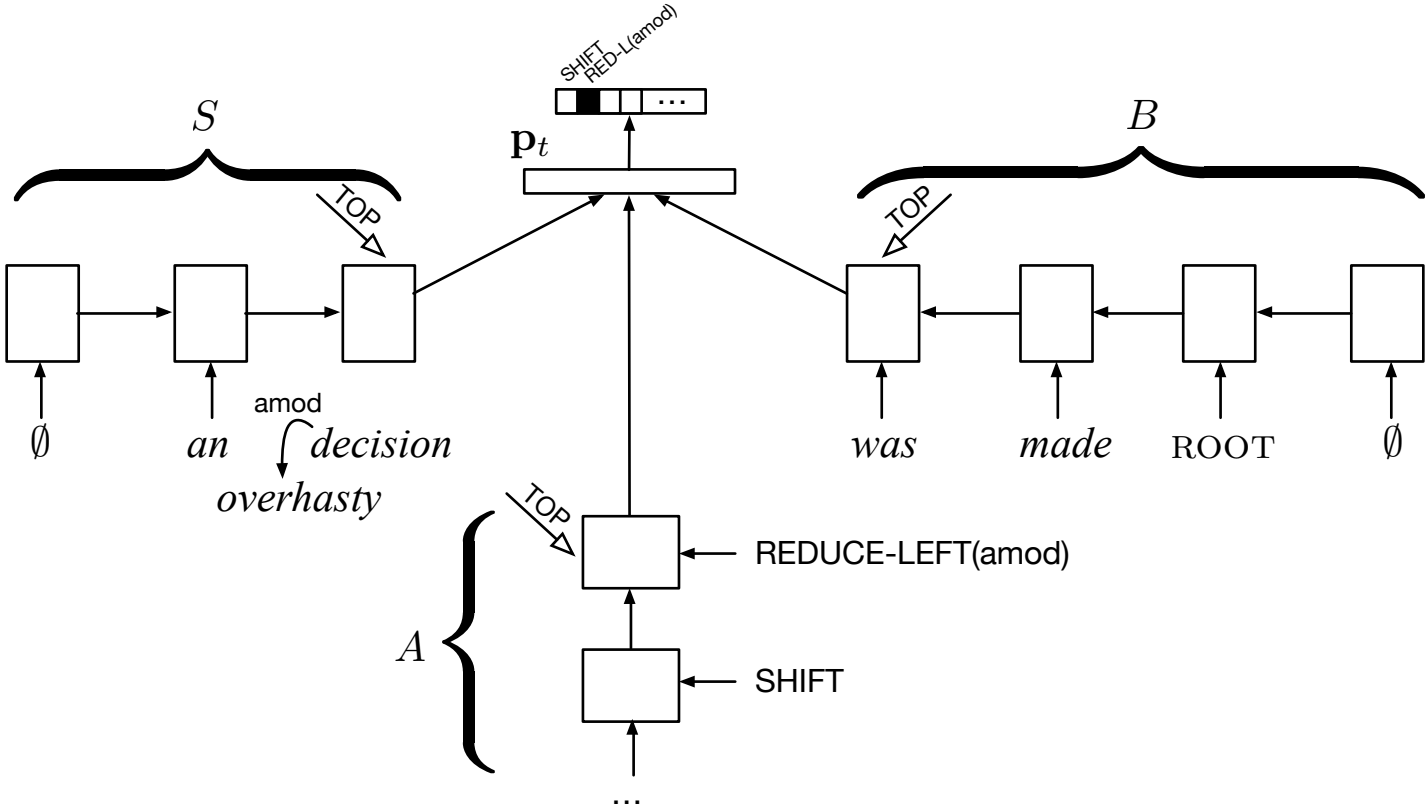
SHIFT
RED-L(amod)
...
$\mathbf{p}_t$
S
B
A
TOP
TOP
TOP
amod
$\emptyset$
an
decision
overhasty
was
made
ROOT
$\emptyset$
REDUCE-LEFT(amod)
SHIFT
...